# Introduction to Robotics

## Lecture 6: Differential and Inverse Kinematics

Konstantinos Chatzilygeroudis - costashatz@upatras.gr

Department of Electrical and Computer Engineering
University of Patras

Template made by Panagiotis Papagiannopoulos

# Introduction to Jacobians

Let's assume that the *end-effector* of our robot is moving with velocity $\dot{\boldsymbol{x}}$[1]. Let's also write the forward kinematics problem as a function of time:

$$\boldsymbol{x}(t) = f_{fk}(\boldsymbol{q}(t))$$

where $f_{fk}$ is the function that gives us the forward kinematics, $\boldsymbol{x} \in \mathbb{R}^m$ the pose of the end-effector, and $\boldsymbol{q} \in \mathbb{R}^n$ the joint values of the robot. If we take the derivative over time:

$$\begin{aligned}\dot{\boldsymbol{x}} &= \frac{\partial f_{fk}(\boldsymbol{q})}{\partial \boldsymbol{q}} \frac{\partial \boldsymbol{q}(t)}{\partial t} \\ &= \boldsymbol{J}(\boldsymbol{q})\dot{\boldsymbol{q}}\end{aligned}$$

where $\boldsymbol{J}(\boldsymbol{q}) \in \mathbb{R}^{m \times n}$ is the Jacobian matrix.

[1] This is an abstract velocity here.

# 2D Jacobian Example

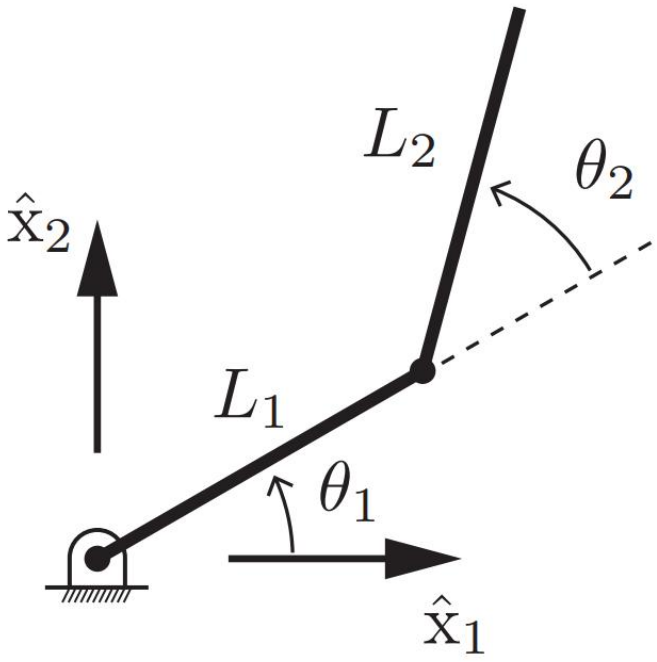


Source: Modern Robotics: Mechanics, Planning, and Control, *Kevin M. Lynch and Frank C. Park*, 2017, Cambridge University Press.

$$x_1 = L_1 \cos\theta_1 + L_2 \cos(\theta_1 + \theta_2)$$
$$x_2 = L_1 \sin\theta_1 + L_2 \sin(\theta_1 + \theta_2)$$

# 2D Jacobian Example (2)

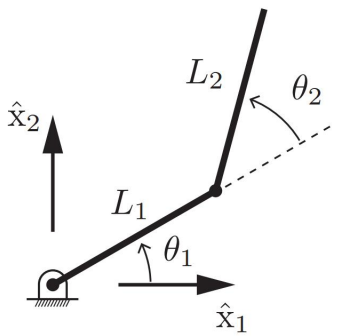


Source: Modern Robotics: Mechanics, Planning, and Control, *Kevin M. Lynch and Frank C. Park*, 2017, Cambridge University Press.

$$x_1 = L_1 \cos\theta_1 + L_2 \cos(\theta_1 + \theta_2)$$
$$x_2 = L_1 \sin\theta_1 + L_2 \sin(\theta_1 + \theta_2)$$

**Let's differentiate over time:**

$$\dot{x}_1 = -L_1\dot{\theta}_1 \sin\theta_1 - L_2(\dot{\theta}_1 + \dot{\theta}_2)\sin(\theta_1 + \theta_2)$$
$$\dot{x}_2 = L_1\dot{\theta}_1 \cos\theta_1 + L_2(\dot{\theta}_1 + \dot{\theta}_2)\cos(\theta_1 + \theta_2)$$

# 2D Jacobian Example (3)

$$x_1 = L_1 \cos\theta_1 + L_2 \cos(\theta_1 + \theta_2)$$
$$x_2 = L_1 \sin\theta_1 + L_2 \sin(\theta_1 + \theta_2)$$

**Let's differentiate over time:**

$$\dot{x}_1 = -L_1\dot{\theta}_1 \sin\theta_1 - L_2(\dot{\theta}_1 + \dot{\theta}_2)\sin(\theta_1 + \theta_2)$$
$$\dot{x}_2 = L_1\dot{\theta}_1 \cos\theta_1 + L_2(\dot{\theta}_1 + \dot{\theta}_2)\cos(\theta_1 + \theta_2)$$

**Let's write it in matrix form:**

$$\begin{bmatrix} \dot{x}_1 \\ \dot{x}_2 \end{bmatrix} = \begin{bmatrix} -L_1 \sin\theta_1 - L_2 \sin(\theta_1 + \theta_2) & -L_2 \sin(\theta_1 + \theta_2) \\ L_1 \cos\theta_1 + L_2 \cos(\theta_1 + \theta_2) & L_2 \cos(\theta_1 + \theta_2) \end{bmatrix} \begin{bmatrix} \dot{\theta}_1 \\ \dot{\theta}_2 \end{bmatrix}$$

$$\begin{bmatrix} \dot{x}_1 \\ \dot{x}_2 \end{bmatrix} = \boldsymbol{J}(\boldsymbol{\theta}) \begin{bmatrix} \dot{\theta}_1 \\ \dot{\theta}_2 \end{bmatrix} \Rightarrow \dot{\boldsymbol{x}} = \boldsymbol{J}(\boldsymbol{\theta})\dot{\boldsymbol{q}}$$

# Manipulability Ellipsoid

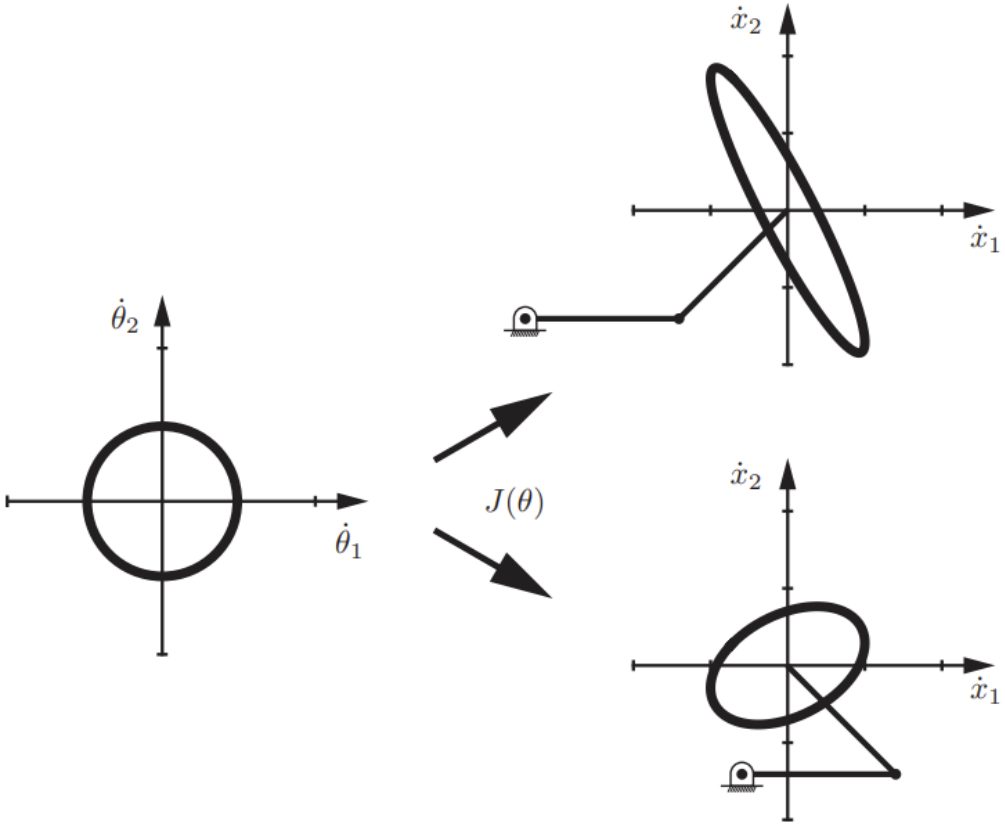


Source: Modern Robotics: Mechanics, Planning, and Control, *Kevin M. Lynch and Frank C. Park*, 2017, Cambridge University Press.

# End-effector Forces and Jacobians

Let's assume that the end-effector exerts a force $\boldsymbol{F}_{\text{tip}}$. This force is achieved via the joint torques $\boldsymbol{\tau}$. Because of the conservation of energy, we have:

$$\begin{aligned}
\boldsymbol{F}_{\text{tip}}^T \boldsymbol{v}_{\text{tip}} &= \boldsymbol{\tau}^T \dot{\boldsymbol{q}} \\
\boldsymbol{F}_{\text{tip}}^T \boldsymbol{J}(\boldsymbol{q}) \dot{\boldsymbol{q}} &= \boldsymbol{\tau}^T \dot{\boldsymbol{q}} \\
\boldsymbol{\tau} &= \boldsymbol{J}^T(\boldsymbol{q}) \boldsymbol{F}_{\text{tip}}
\end{aligned}$$

# End-effector Forces and Jacobians

Let's assume that the end-effector exerts a force $\boldsymbol{F}_{\text{tip}}$. This force is achieved via the joint torques $\boldsymbol{\tau}$. Because of the conservation of energy, we have:

$$\begin{aligned} \boldsymbol{F}_{\text{tip}}^T \boldsymbol{v}_{\text{tip}} &= \boldsymbol{\tau}^T \dot{\boldsymbol{q}} \\ \boldsymbol{F}_{\text{tip}}^T \boldsymbol{J}(\boldsymbol{q}) \dot{\boldsymbol{q}} &= \boldsymbol{\tau}^T \dot{\boldsymbol{q}} \\ \boldsymbol{\tau} &= \boldsymbol{J}^T(\boldsymbol{q}) \boldsymbol{F}_{\text{tip}} \end{aligned}$$

**If** $\boldsymbol{J}(\boldsymbol{q})$ is invertible, we have:

$$\boldsymbol{F}_{\text{tip}} = \boldsymbol{J}^{-T}(\boldsymbol{q}) \boldsymbol{\tau}$$

# Manipulability and Force Ellipsoids

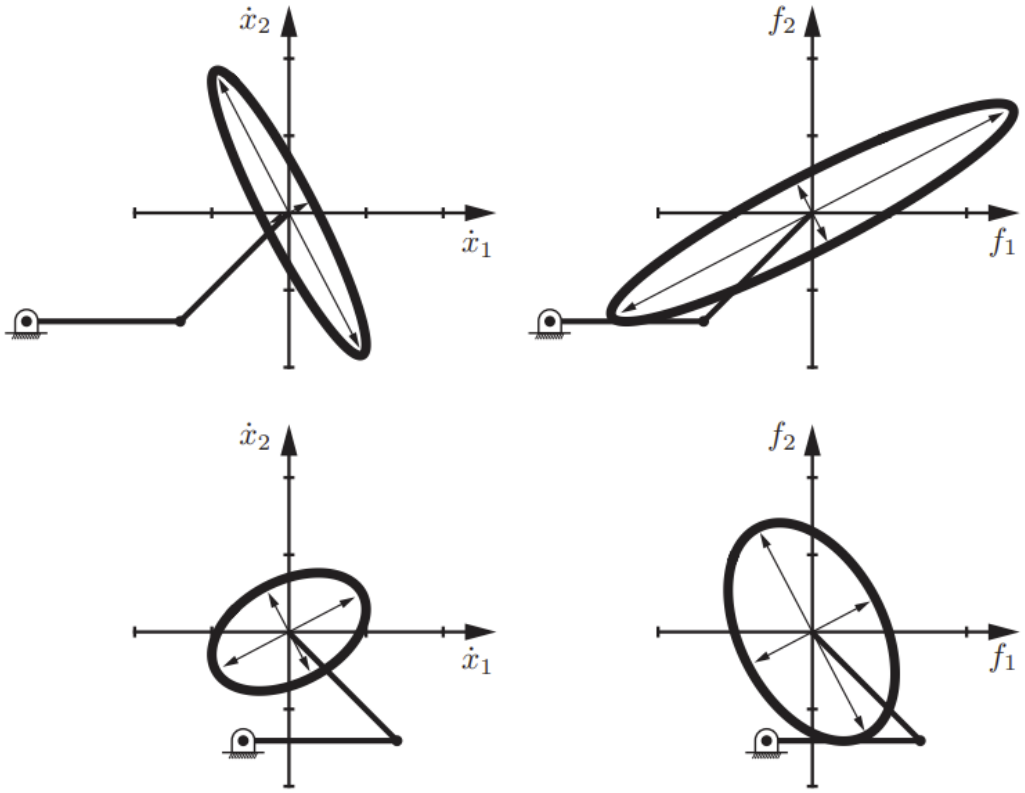


Source: Modern Robotics: Mechanics, Planning, and Control, *Kevin M. Lynch and Frank C. Park*, 2017, Cambridge University Press.

# Geometric Jacobians

- What happens when $\boldsymbol{x} = \boldsymbol{T} \in SE(3)$?

## Geometric Jacobians

- What happens when $\boldsymbol{x} = \boldsymbol{T} \in SE(3)$?
- The velocity of the end-effector is a twist $\mathcal{V}$!
- How can we compute the Jacobian in this case?

# Geometric Jacobians

- What happens when $\boldsymbol{x} = \boldsymbol{T} \in SE(3)$?
- The velocity of the end-effector is a twist $\mathcal{V}$!
- How can we compute the Jacobian in this case?
- We start from forward kinematics:

$$\boldsymbol{T}(\boldsymbol{q}) = \exp(\hat{\mathcal{S}}_1 q_1)\exp(\hat{\mathcal{S}}_2 q_2)\cdots\exp(\hat{\mathcal{S}}_n q_n)\boldsymbol{M}$$

# Geometric Jacobians

- What happens when $\boldsymbol{x} = \boldsymbol{T} \in SE(3)$?
- The velocity of the end-effector is a twist $\mathcal{V}$!
- How can we compute the Jacobian in this case?
- We start from forward kinematics:

$$\boldsymbol{T}(\boldsymbol{q}) = \exp(\hat{\mathcal{S}}_1 q_1)\exp(\hat{\mathcal{S}}_2 q_2)\cdots\exp(\hat{\mathcal{S}}_n q_n)\boldsymbol{M}$$

- We differentiate through time:

$$\begin{aligned}\dot{\boldsymbol{T}}(\boldsymbol{q}) = {} & \hat{\mathcal{S}}_1 \dot{q}_1 \exp(\hat{\mathcal{S}}_1 q_1)\exp(\hat{\mathcal{S}}_2 q_2)\cdots\exp(\hat{\mathcal{S}}_n q_n)\boldsymbol{M} \\ & + \exp(\hat{\mathcal{S}}_1 q_1)\hat{\mathcal{S}}_2 \dot{q}_2 \exp(\hat{\mathcal{S}}_2 q_2)\cdots\exp(\hat{\mathcal{S}}_n q_n)\boldsymbol{M} + \cdots\end{aligned}$$

# Geometric Jacobians (2)

- We start from forward kinematics:

$$\boldsymbol{T}(\boldsymbol{q}) = \exp(\hat{\mathcal{S}}_1 q_1)\exp(\hat{\mathcal{S}}_2 q_2)\cdots\exp(\hat{\mathcal{S}}_n q_n)\boldsymbol{M}$$

- We differentiate through time:

$$\begin{aligned}\dot{\boldsymbol{T}}(\boldsymbol{q}) = {} & \hat{\mathcal{S}}_1 \dot{q}_1 \exp(\hat{\mathcal{S}}_1 q_1)\exp(\hat{\mathcal{S}}_2 q_2)\cdots\exp(\hat{\mathcal{S}}_n q_n)\boldsymbol{M} \\ & + \exp(\hat{\mathcal{S}}_1 q_1)\hat{\mathcal{S}}_2 \dot{q}_2 \exp(\hat{\mathcal{S}}_2 q_2)\cdots\exp(\hat{\mathcal{S}}_n q_n)\boldsymbol{M} + \cdots\end{aligned}$$

# Geometric Jacobians (2)

- We start from forward kinematics:

$$\boldsymbol{T}(\boldsymbol{q}) = \exp(\hat{\mathcal{S}}_1 q_1)\exp(\hat{\mathcal{S}}_2 q_2)\cdots\exp(\hat{\mathcal{S}}_n q_n)\boldsymbol{M}$$

- We differentiate through time:

$$\begin{aligned}\dot{\boldsymbol{T}}(\boldsymbol{q}) = {} & \hat{\mathcal{S}}_1 \dot{q}_1 \exp(\hat{\mathcal{S}}_1 q_1)\exp(\hat{\mathcal{S}}_2 q_2)\cdots\exp(\hat{\mathcal{S}}_n q_n)\boldsymbol{M} \\ & + \exp(\hat{\mathcal{S}}_1 q_1)\hat{\mathcal{S}}_2 \dot{q}_2 \exp(\hat{\mathcal{S}}_2 q_2)\cdots\exp(\hat{\mathcal{S}}_n q_n)\boldsymbol{M} + \cdots\end{aligned}$$

- We also know that $[\mathcal{V}_w] = \dot{\boldsymbol{T}}\boldsymbol{T}^{-1}$!
- And $\boldsymbol{T}^{-1}(\boldsymbol{q}) = \boldsymbol{M}^{-1}\exp(-\hat{\mathcal{S}}_n q_n)\cdots\exp(-\hat{\mathcal{S}}_2 q_2)\exp(-\hat{\mathcal{S}}_1 q_1)$

# Geometric Jacobians (2)

- We start from forward kinematics:

$$\boldsymbol{T}(\boldsymbol{q}) = \exp(\hat{\mathcal{S}}_1 q_1)\exp(\hat{\mathcal{S}}_2 q_2)\cdots\exp(\hat{\mathcal{S}}_n q_n)\boldsymbol{M}$$

- We differentiate through time:

$$\begin{aligned}\dot{\boldsymbol{T}}(\boldsymbol{q}) = {} & \hat{\mathcal{S}}_1 \dot{q}_1 \exp(\hat{\mathcal{S}}_1 q_1)\exp(\hat{\mathcal{S}}_2 q_2)\cdots\exp(\hat{\mathcal{S}}_n q_n)\boldsymbol{M} \\ & + \exp(\hat{\mathcal{S}}_1 q_1)\hat{\mathcal{S}}_2 \dot{q}_2 \exp(\hat{\mathcal{S}}_2 q_2)\cdots\exp(\hat{\mathcal{S}}_n q_n)\boldsymbol{M} + \cdots\end{aligned}$$

- We also know that $[\mathcal{V}_w] = \dot{\boldsymbol{T}}\boldsymbol{T}^{-1}$!
- And $\boldsymbol{T}^{-1}(\boldsymbol{q}) = \boldsymbol{M}^{-1}\exp(-\hat{\mathcal{S}}_n q_n)\cdots\exp(-\hat{\mathcal{S}}_2 q_2)\exp(-\hat{\mathcal{S}}_1 q_1)$
- We have:

$$\begin{aligned}\mathcal{V}_w = {} & \underbrace{\mathcal{S}_1}_{\boldsymbol{J}_{w1}}\dot{\boldsymbol{q}}_1 + \underbrace{[Ad_{\exp(\hat{\mathcal{S}}_1 q_1)}]\mathcal{S}_2}_{\boldsymbol{J}_{w2}}\dot{\boldsymbol{q}}_2 \\ & + \underbrace{[Ad_{\exp(\hat{\mathcal{S}}_1 q_1)\exp(\hat{\mathcal{S}}_2 q_2)}]\mathcal{S}_3}_{\boldsymbol{J}_{w3}}\dot{\boldsymbol{q}}_3 + \cdots\end{aligned}$$

# Geometric Jacobians (3)

- Overall $\mathcal{V}_w$ has the form of:

$$\mathcal{V}_w = \boldsymbol{J}_{w1}(\boldsymbol{q})\dot{\boldsymbol{q}}_1 + \boldsymbol{J}_{w2}(\boldsymbol{q})\dot{\boldsymbol{q}}_2 + \cdots + \boldsymbol{J}_{wn}(\boldsymbol{q})\dot{\boldsymbol{q}}_n$$

where $\boldsymbol{J}_{wi}$'s are screw axes that depend only on $\boldsymbol{q}$.

# Geometric Jacobians (3)

- Overall $\mathcal{V}_w$ has the form of:

$$\mathcal{V}_w = \boldsymbol{J}_{w1}(\boldsymbol{q})\dot{\boldsymbol{q}}_1 + \boldsymbol{J}_{w2}(\boldsymbol{q})\dot{\boldsymbol{q}}_2 + \cdots + \boldsymbol{J}_{wn}(\boldsymbol{q})\dot{\boldsymbol{q}}_n$$

  where $\boldsymbol{J}_{wi}$'s are screw axes that depend only on $\boldsymbol{q}$.

- We can write this in matrix form:

$$\begin{aligned}\mathcal{V}_w &= \begin{bmatrix}\boldsymbol{J}_{w1}(\boldsymbol{q}) & \boldsymbol{J}_{w2}(\boldsymbol{q}) & \cdots & \boldsymbol{J}_{wn}(\boldsymbol{q})\end{bmatrix}\begin{bmatrix}\dot{\boldsymbol{q}}_1\\ \dot{\boldsymbol{q}}_2\\ \vdots\\ \dot{\boldsymbol{q}}_n\end{bmatrix}\\ &= \boldsymbol{J}_w(\boldsymbol{q})\dot{\boldsymbol{q}}\end{aligned}$$

# Jacobians - 3R Example

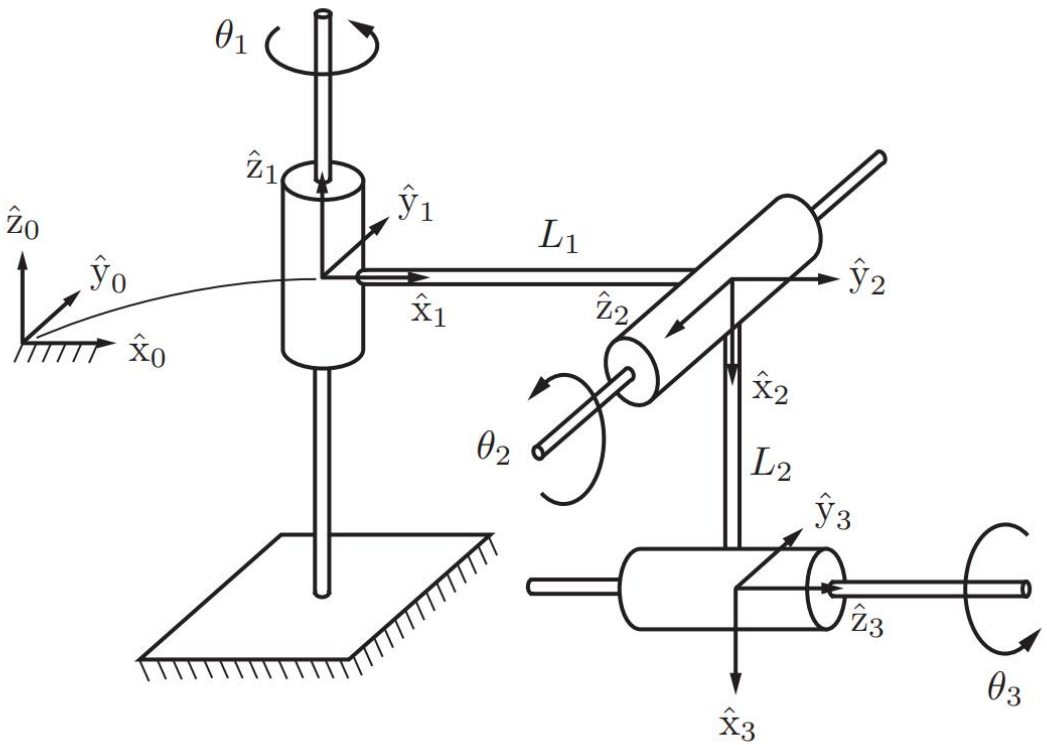


Source: Modern Robotics: Mechanics, Planning, and Control, *Kevin M. Lynch and Frank C. Park*, 2017, Cambridge University Press.

# Jacobians - 3R Example (2)

- We start by defining the screw axes and "home" transformation matrix:

# Jacobians - 3R Example (2)

- We start by defining the screw axes and "home" transformation matrix:
- $\boldsymbol{M} = \begin{bmatrix} 0 & 0 & 1 & L_1 \\ 0 & 1 & 0 & 0 \\ -1 & 0 & 0 & -L_2 \\ 0 & 0 & 0 & 1 \end{bmatrix}$
- $\mathcal{S}_1 = \begin{bmatrix} 0 & 0 & 1 & 0 & 0 & 0 \end{bmatrix}^T$
- $\mathcal{S}_2 = \begin{bmatrix} 0 & -1 & 0 & 0 & 0 & -L_1 \end{bmatrix}^T$
- $\mathcal{S}_3 = \begin{bmatrix} 1 & 0 & 0 & 0 & -L_2 & 0 \end{bmatrix}^T$

# Jacobians - 3R Example (3)

We just follow the equations:

- $\boldsymbol{J}_{w1}$

# Jacobians - 3R Example (3)

We just follow the equations:

- $\boldsymbol{J}_{w1} = \mathcal{S}_1$

# Jacobians - 3R Example (3)

We just follow the equations:

- $\boldsymbol{J}_{w1} = \mathcal{S}_1$
- $\boldsymbol{J}_{w2} = [Ad_{\exp(\hat{\mathcal{S}}_1 q_1)}]\mathcal{S}_2$
- $\boldsymbol{J}_{w3} = [Ad_{\exp(\hat{\mathcal{S}}_1 q_1)\exp(\hat{\mathcal{S}}_2 q_2)}]\mathcal{S}_3$

And now what?

# Jacobians - 3R Example (3)

We just follow the equations:

- $\boldsymbol{J}_{w1} = \mathcal{S}_1$
- $\boldsymbol{J}_{w2} = [Ad_{\exp(\hat{\mathcal{S}}_1 q_1)}]\mathcal{S}_2$
- $\boldsymbol{J}_{w3} = [Ad_{\exp(\hat{\mathcal{S}}_1 q_1)\exp(\hat{\mathcal{S}}_2 q_2)}]\mathcal{S}_3$

And now what?

- Let's assume $\boldsymbol{q} = \begin{bmatrix} 0 & 0 & 0 \end{bmatrix}^T$, and do the calculations:
- $\boldsymbol{J}_{w1} = \begin{bmatrix} 0 & 0 & 1 & 0 & 0 & 0 \end{bmatrix}^T$
- $\boldsymbol{J}_{w2} = \begin{bmatrix} 0 & -1 & 0 & 0 & 0 & -L_1 \end{bmatrix}^T$
- $\boldsymbol{J}_{w3} = \begin{bmatrix} 1 & 0 & 0 & 0 & -L_2 & 0 \end{bmatrix}^T$
- Let's do the same for $\boldsymbol{q} = \begin{bmatrix} \frac{\pi}{2} & \frac{\pi}{2} & \frac{\pi}{2} \end{bmatrix}^T$:

# Jacobians - 3R Example (3)

We just follow the equations:

- $\boldsymbol{J}_{w1} = \mathcal{S}_1$
- $\boldsymbol{J}_{w2} = [Ad_{\exp(\hat{\mathcal{S}}_1 q_1)}]\mathcal{S}_2$
- $\boldsymbol{J}_{w3} = [Ad_{\exp(\hat{\mathcal{S}}_1 q_1)\exp(\hat{\mathcal{S}}_2 q_2)}]\mathcal{S}_3$

And now what?

- Let's assume $\boldsymbol{q} = \begin{bmatrix} 0 & 0 & 0 \end{bmatrix}^T$, and do the calculations:
- $\boldsymbol{J}_{w1} = \begin{bmatrix} 0 & 0 & 1 & 0 & 0 & 0 \end{bmatrix}^T$
- $\boldsymbol{J}_{w2} = \begin{bmatrix} 0 & -1 & 0 & 0 & 0 & -L_1 \end{bmatrix}^T$
- $\boldsymbol{J}_{w3} = \begin{bmatrix} 1 & 0 & 0 & 0 & -L_2 & 0 \end{bmatrix}^T$
- Let's do the same for $\boldsymbol{q} = \begin{bmatrix} \frac{\pi}{2} & \frac{\pi}{2} & \frac{\pi}{2} \end{bmatrix}^T$:
- $\boldsymbol{J}_{w1} = \begin{bmatrix} 0 & 0 & 1 & 0 & 0 & 0 \end{bmatrix}^T$
- $\boldsymbol{J}_{w2} = \begin{bmatrix} 1 & 0 & 0 & 0 & 0 & -L_1 \end{bmatrix}^T$
- $\boldsymbol{J}_{w3} = \begin{bmatrix} 0 & 0 & 1 & L_1 + L_2 & 0 & 0 \end{bmatrix}^T$

# Geometric Jacobians in Body Frame

- We follow a similar process and we arrive at:

$$\mathcal{V}_b = \begin{bmatrix} \boldsymbol{J}_{b1}(\boldsymbol{q}) & \boldsymbol{J}_{b2}(\boldsymbol{q}) & \cdots & \boldsymbol{J}_{bN}(\boldsymbol{q}) \end{bmatrix} \begin{bmatrix} \dot{\boldsymbol{q}}_1 \\ \dot{\boldsymbol{q}}_2 \\ \vdots \\ \dot{\boldsymbol{q}}_n \end{bmatrix}$$

$$= \boldsymbol{J}_b(\boldsymbol{q})\dot{\boldsymbol{q}}$$

where:

$$\boldsymbol{J}_{bi}(\boldsymbol{q}) = [Ad_{\exp(-\hat{\mathcal{B}}_n q_n)\cdots\exp(-\hat{\mathcal{B}}_{i+1} q_{i+1})}]\mathcal{B}_i$$

$$\boldsymbol{J}_{bN}(\boldsymbol{q}) = \mathcal{B}_n$$

# Geometric Jacobians - Verdict

- Twist $\mathcal{V}_w$ of the end-effector expressed in world frame
- We have: $\mathcal{V}_w = \boldsymbol{J}_w(\boldsymbol{q})\dot{\boldsymbol{q}}$, where $\boldsymbol{J}_w(\boldsymbol{q}) \in \mathbb{R}^{6\times n}$
- We have: $\mathcal{V}_b = \boldsymbol{J}_b(\boldsymbol{q})\dot{\boldsymbol{q}}$, where $\boldsymbol{J}_b(\boldsymbol{q}) \in \mathbb{R}^{6\times n}$ is the Jacobian expressed in body frame
- We also have: $\boldsymbol{J}_b = [Ad_{\boldsymbol{T}_{bw}}]\boldsymbol{J}_w$ and $\boldsymbol{J}_w = [Ad_{\boldsymbol{T}_{wb}}]\boldsymbol{J}_b$

From the principle of energy conservation, we can also derive an equation for the *wrenches*:

$$\boldsymbol{\tau} = \boldsymbol{J}_w(\boldsymbol{q})^T \mathcal{F}_w$$
$$\boldsymbol{\tau} = \boldsymbol{J}_b(\boldsymbol{q})^T \mathcal{F}_b$$

where $\boldsymbol{\tau} \in \mathbb{R}^n$ are the joint torques/forces.

# Kinematic Singularities

- End-effector **loses the ability to move instantaneously in one or more directions**
- We can use the Jacobian to identify them. How?

# Kinematic Singularities

- End-effector **loses the ability to move instantaneously in one or more directions**
- We can use the Jacobian to identify them. How?
- When the Jacobian matrix loses rank!

# Kinematic Singularities

- End-effector **loses the ability to move instantaneously in one or more directions**
- We can use the Jacobian to identify them. How?
- When the Jacobian matrix loses rank!
- Let's consider the 3R example when $\boldsymbol{q} = \begin{bmatrix} -\frac{\pi}{2} & -\frac{\pi}{2} & -\frac{\pi}{2} \end{bmatrix}^T$. The Jacobian is:

$$\boldsymbol{J}_w = \begin{bmatrix} 0 & -1 & 0 \\ 0 & 0 & 0 \\ 1 & 0 & -1 \\ 0 & 0 & -1 \\ 0 & 0 & 0 \\ 0 & -1 & 0 \end{bmatrix}$$

- Rank of $\boldsymbol{J}$ is 3! Thus, this is a singularity pose!

# Inverse Kinematics

- This is the "opposite" problem of forward kinematics
- We can find closed-form solutions for some systems
- We can develop iterative algorithms
- We can view the problem as an optimization problem
  - We can use kinematic information!
  - Or we can go black-box!
  - We can take advantage of numerical optimization methods

# Numerical Inverse Kinematics

- We have the end-effector pose, $\boldsymbol{x} \in \mathbb{R}^m$, which is given by the forward kinematics $\boldsymbol{x} = f(\boldsymbol{q})$, where $\boldsymbol{q} \in \mathbb{R}^n$ are the joint positions ($n$ degrees of freedom)
- Let's say that we want to go to $\boldsymbol{x}_d$
- We have the following error $e(\boldsymbol{q}) = \boldsymbol{x}_d - f(\boldsymbol{q})$
- So in fact we want to find $\boldsymbol{q}_d$ such that $e(\boldsymbol{q}_d) = \boldsymbol{x}_d - f(\boldsymbol{q}_d) = \mathbf{0}$
- We have (Taylor Expansion around $\boldsymbol{q}_0$):

$$\boldsymbol{x}_d - f(\boldsymbol{q}_d) = \mathbf{0}$$

$$\boldsymbol{x}_d = f(\boldsymbol{q}_d) = f(\boldsymbol{q}_0) + \left.\frac{\partial f}{\partial \boldsymbol{q}}\right|_{\boldsymbol{q}=\boldsymbol{q}_0} (\boldsymbol{q}_d - \boldsymbol{q}_0) + \ldots$$

# Numerical Inverse Kinematics (2)

**What does $\frac{\partial f}{\partial \boldsymbol{q}}$ remind us of?**

# Numerical Inverse Kinematics (2)

**What does $\frac{\partial f}{\partial \boldsymbol{q}}$ remind us of?**

$$\begin{aligned}\boldsymbol{x}_d = f(\boldsymbol{q}_d) &= f(\boldsymbol{q}_0) + \frac{\partial f}{\partial \boldsymbol{q}}\Big|_{\boldsymbol{q}=\boldsymbol{q}_0}(\boldsymbol{q}_d - \boldsymbol{q}_0) + \ldots \\ &= f(\boldsymbol{q}_0) + \boldsymbol{J}(\boldsymbol{q}_0)\Delta\boldsymbol{q} + \ldots \\ \boldsymbol{J}(\boldsymbol{q}_0)\Delta\boldsymbol{q} &= \boldsymbol{x}_d - f(\boldsymbol{q}_0)\end{aligned}$$

**If we assume that $J$ is invertible:**

$$\Delta\boldsymbol{q} = \boldsymbol{J}^{-1}(\boldsymbol{q}_0)(\boldsymbol{x}_d - f(\boldsymbol{q}_0))$$

**Newton-Raphson Algorithm for IK:**

1. $\boldsymbol{q}_k = \boldsymbol{q}_0, k = 0$
2. $\Delta\boldsymbol{q} = \boldsymbol{J}^{-1}(\boldsymbol{q}_k)(\boldsymbol{x}_d - f(\boldsymbol{q}_k))$
3. $\boldsymbol{q}_{k+1} = \boldsymbol{q}_k + \Delta\boldsymbol{q}$
4. If $\boldsymbol{x}_d - f(\boldsymbol{q}_{k+1}) \approx 0$, we stop, otherwise $k = k + 1$ and we go back to step 2

# Numerical Inverse Kinematics (3)

**What if $J$ is NOT invertible?**

# Numerical Inverse Kinematics (3)

**What if $J$ is NOT invertible?**

**No problem! We can use the Moore–Penrose pseudoinverse**:

$$\boldsymbol{J}^{\dagger} = \boldsymbol{J}^{T}(\boldsymbol{J}\boldsymbol{J}^{T})^{-1}, \text{if } n > m, (\boldsymbol{J}^{\dagger}\boldsymbol{J} = \boldsymbol{I})$$
$$\boldsymbol{J}^{\dagger} = (\boldsymbol{J}^{T}\boldsymbol{J})^{-1}\boldsymbol{J}^{T}, \text{if } n < m, (\boldsymbol{J}\boldsymbol{J}^{\dagger} = \boldsymbol{I})$$

And thus:

$$\Delta\boldsymbol{q} = \boldsymbol{J}^{\dagger}(\boldsymbol{q}_0)(\boldsymbol{x}_d - f(\boldsymbol{q}_0))$$

# Numerical Inverse Kinematics (4)

**But can we take differences for full transformation matrices?!**
Let $\boldsymbol{T}_{wd} \in SE(3)$ be the target transformation matrix, then we get the following algorithm:

1. $\boldsymbol{q}_k = \boldsymbol{q}_0, k = 0$
2. $[\mathcal{V}_b] = \log(\boldsymbol{T}_{wb}^{-1}(\boldsymbol{q}_k)\boldsymbol{T}_{wd})$, $\boldsymbol{T}_{wb}(\boldsymbol{q})$ gives the forward kinematics
3. $\Delta\boldsymbol{q} = \boldsymbol{J}_b^{\dagger}(\boldsymbol{q}_k)\mathcal{V}_b$, $\boldsymbol{J}_b$ is the body Jacobian
4. $\boldsymbol{q}_{k+1} = \boldsymbol{q}_k + \Delta\boldsymbol{q}$
5. If $||\mathcal{V}_b|| \approx 0$, we stop, otherwise $k = k + 1$ and we go back to step 2

We can do the same computations using the world space Jacobians ($\boldsymbol{J}_w$) and errors ($\mathcal{V}_w = [Ad_{\boldsymbol{T}_{wb}}]\mathcal{V}_b = \log(\boldsymbol{T}_{wd}\boldsymbol{T}_{wb}^{-1}(\boldsymbol{q}_k))$).

# Inverse Kinematics via Optimization

**Newton's method for IK has several problems:**

- It is local, i.e. $\boldsymbol{q}_0$ should close to the solution
- It can "break" when we are close to singularities:
  - the Jacobian matrix loses rank!
  - the end-effector cannot move in some direction(s)
- The final $\boldsymbol{q}*$ values can violate the robot joint limits!!

**Alternative method:**

- Minimize the error
- $[\mathcal{V}_b] = \log(\boldsymbol{T}_{wb}^{-1}(\boldsymbol{q}_k)\boldsymbol{T}_{wd})$ gives us the error
- We want this to be as small as possible; this is an optimization problem!
- We can add constraints

# Bibliography

Chapter 5 and 6 from **Modern Robotics: Mechanics, Planning, and Control**, *Kevin M. Lynch and Frank C. Park*, 2017, Cambridge University Press. ebook

# Thank you

- **Any Questions?**
- **Office Hours**:
  - **Tue-Thu** *(10:00-12:00)*
  - 24/7 by email (`costashatz@upatras.gr`, subject: *ECE_IR_AM*)
- **Material and Announcements**

*Laboratory of Automation & Robotics*